5008MG - Pyörösaha

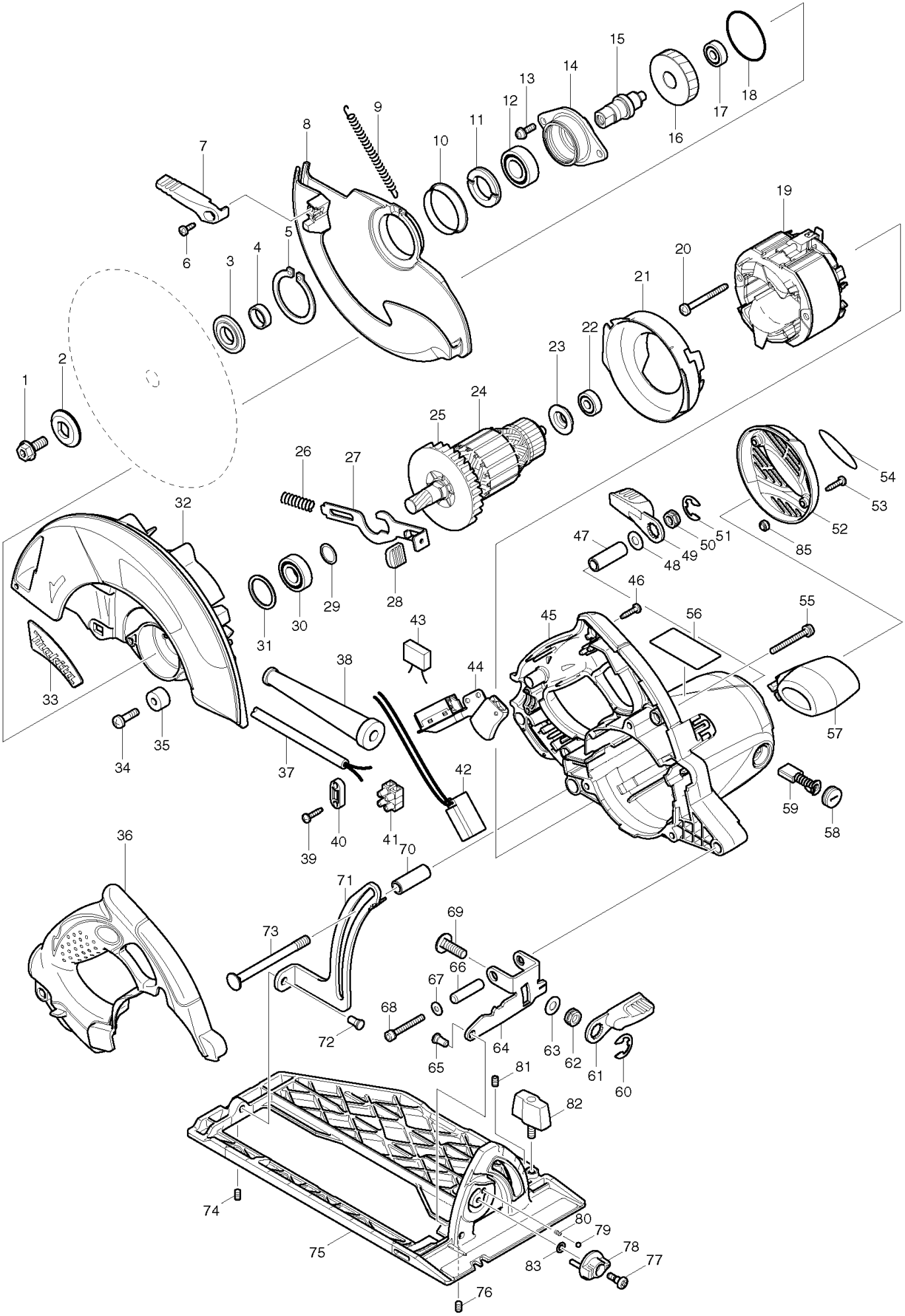

1	266283-4	HEX. SOCKET HEX. BOLT M8X20
2	224409-4	OUTER FLANGE 35
3	224412-5	INNER FLANGE 35
4	257279-6	RING 17
5	961201-4	RETAINING RING S-42
6	266398-7	TAPPING SCREW BIND CT 4X12
7	272258-3	LEVER 37
8	318175-4	SAFETY COVER
9	231848-1	TENSION SPRING 4
10	345422-0	SPACER
11	285848-3	BEARING RETAINER 23-36
12	211275-8	BALL BEARING 6003DDW
13	911223-4	PAN HEAD SCREW M5X16
14	318056-2	BEARING BOX
15	324690-8	SPINDLE
16	226662-8	HELICAL GEAR 43
17	211031-6	BALL BEARING 608LLB
18	213623-7	O RING 46
19	596289-1	FIELD ASS'Y 240V
20	266397-9	TAPPING SCREW BIND 5X50
21	419548-5	BAFFLE PLATE
22	211031-6	BALL BEARING 608LLB
23	681625-5	INSULATION WASHER
24	517763-6	ARMATURE ASS'Y 220V
26	231297-2	COMPRESSION SPRING 9
27	345717-1	SHAFT LOCK
28	286275-7	CAP
29	267280-3	FLAT WASHER 15
30	211236-8	BALL BEARING 6002DDW
31	261132-0	URETHANE WASHER 26
32	188446-1	BLADE CASE SET
33	819234-2	MAKITA LOGO PLATE
34	251247-1	+ PAN HEAD SCREW M6X20
35	262552-1	RUBBER SLEEVE 6
36	419553-2	HANDLE COVER
37	665865-3	POWER SUPPLY CORD 1.0-2-2.5
38	682564-2	CORD GUARD
39	266326-2	TAPPING SCREW 4X18
40	687124-5	STRAIN RELIEF
41	654531-7	TERMINAL BLOCK 2P
42	631710-4	LIGHT CIRCUIT
43	645200-1	NOISE SUPPRESSOR
44	651189-3	SWITCH TG933TN-2
45	158100-1	MOTOR HOUSING COMPLETE
46	266326-2	TAPPING SCREW 4X18
47	331719-3	PIPE 9
48	941201-0	FLAT WASHER 8
49	272253-3	LEVER 56
50	252199-9	HEX. NUT M8-13

51	257953-6	BOW STOP RING E-12
52	188448-7	REAR COVER SET
53	266326-2	TAPPING SCREW 4X18
54	819237-6	MAKITA LOGO LABEL
55	911268-2	PAN HEAD SCREW M5X45
56	863999-8	5008MG NAME PLATE
57	419550-8	FRONT GRIP
58	643650-4	BRUSH HOLDER CAP 6.5-13.5
59	181044-0	CARBON BRUSH CB-153
60	257953-6	BOW STOP RING E-12
61	272253-3	LEVER 56
62	252199-9	HEX. NUT M8-13
63	941201-0	FLAT WASHER 8
64	345835-5	ANGULAR GUIDE
65	256511-5	SHOULDER PIN 6-7
66	257759-2	SLEEVE 6
67	941101-4	FLAT WASHER 5
68	922261-1	HEX. SOCKET HEAD BOLT M5X40
69	266396-1	FLAT HEADSQUARE NECKBOLT M8X24
70	331719-3	PIPE 9
71	345833-9	DEPTH GUIDE
72	256511-5	SHOULDER PIN 6-7
73	266237-1	CAP SQUARE NECK BOLT M8X90
74	266229-0	H.S.SET SCREW(CUP POINT)M5X8
75	158423-7	BASE COMPLETE
76	266229-0	H.S.SET SCREW(CUP POINT)M5X8
77	251370-2	+ PAN HEAD SCREW M5
78	419549-3	DIAL 27
79	216008-6	STEEL BALL 4
80	233314-4	COMPRESSION SPRING 4
81	266229-0	H.S.SET SCREW(CUP POINT)M5X8
82	251858-2	SCREW M6X15
83	253811-4	FLAT WASHER 5
85	450351-5	SPACER

5008MG - Pyörösaha

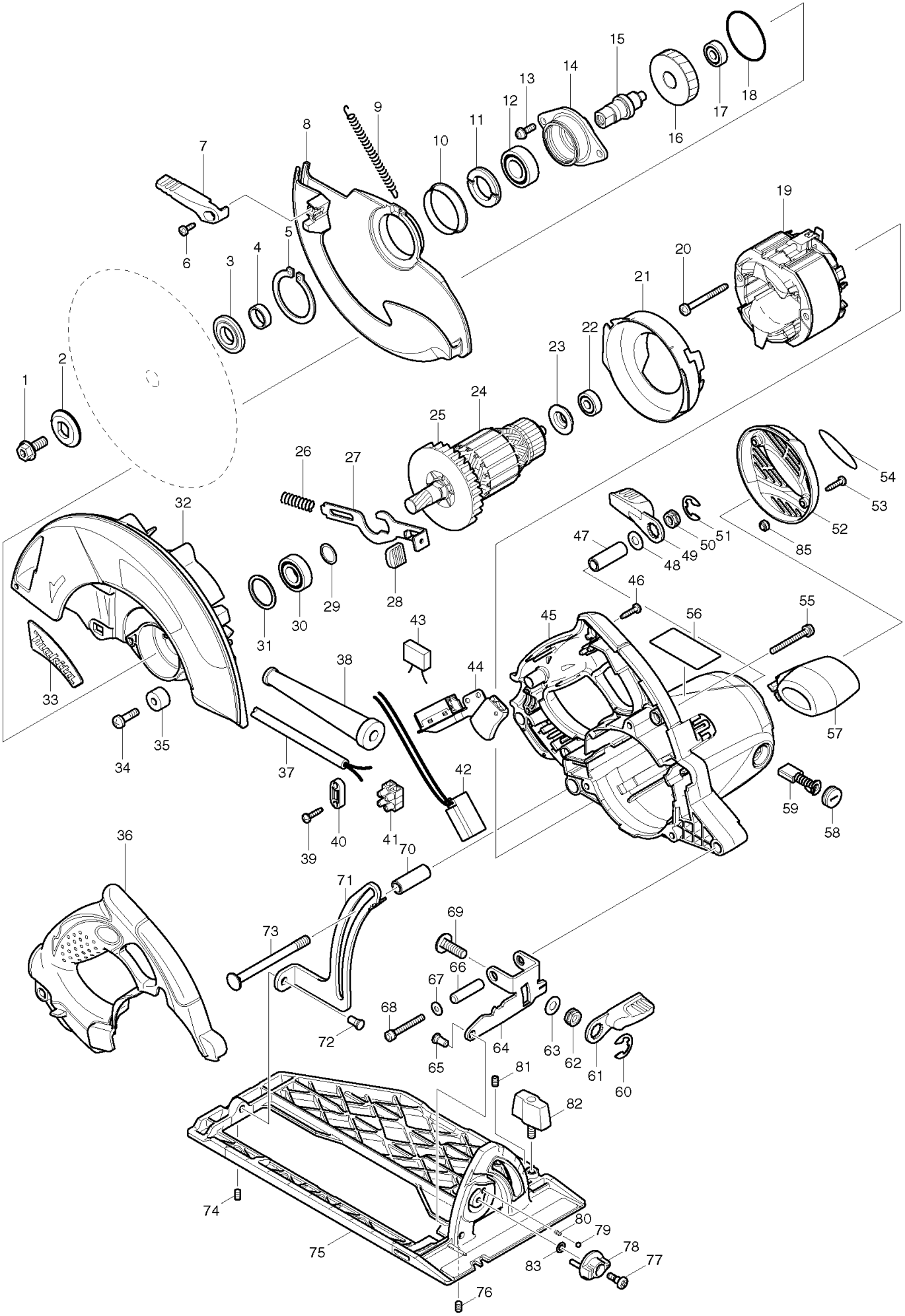

1	266283-4	HEX. SOCKET HEX. BOLT M8X20
2	224409-4	OUTER FLANGE 35
3	224412-5	INNER FLANGE 35
4	257279-6	RING 17
5	961201-4	RETAINING RING S-42
6	266398-7	TAPPING SCREW BIND CT 4X12
7	272258-3	LEVER 37
8	318175-4	SAFETY COVER
9	231848-1	TENSION SPRING 4
10	345422-0	SPACER
11	285848-3	BEARING RETAINER 23-36
12	210301-0	BALL BEARING 6003DDW
13	911223-4	PAN HEAD SCREW M5X16
14	318056-2	BEARING BOX
15	324690-8	SPINDLE
16	226662-8	HELICAL GEAR 43
17	211031-6	BALL BEARING 608LLB
18	213623-7	O RING 46
19	596289-1	FIELD ASS'Y 240V
20	266397-9	TAPPING SCREW BIND 5X50
21	419548-5	BAFFLE PLATE
22	211031-6	BALL BEARING 608LLB
23	681625-5	INSULATION WASHER
24	517763-6	ARMATURE ASS'Y 220V
26	231297-2	COMPRESSION SPRING 9
27	345717-1	SHAFT LOCK
28	286275-7	CAP
29	267280-3	FLAT WASHER 15
30	211236-8	BALL BEARING 6002DDW
31	261132-0	URETHANE WASHER 26
32	188446-1	BLADE CASE SET
33	819234-2	MAKITA LOGO PLATE
34	251247-1	+ PAN HEAD SCREW M6X20
35	262552-1	RUBBER SLEEVE 6
36	419553-2	HANDLE COVER
37	665865-3	POWER SUPPLY CORD 1.0-2-2.5
38	682564-2	CORD GUARD
39	266326-2	TAPPING SCREW 4X18
40	687124-5	STRAIN RELIEF
41	654531-7	TERMINAL BLOCK 2P
42	631710-4	LIGHT CIRCUIT
43	645200-1	NOISE SUPPRESSOR
44	651189-3	SWITCH TG933TN-2
45	158100-1	MOTOR HOUSING COMPLETE
46	266326-2	TAPPING SCREW 4X18
47	331719-3	PIPE 9
48	941201-0	FLAT WASHER 8
49	272253-3	LEVER 56
50	252199-9	HEX. NUT M8-13

51	257953-6	BOW STOP RING E-12
52	188448-7	REAR COVER SET
53	266326-2	TAPPING SCREW 4X18
54	819237-6	MAKITA LOGO LABEL
55	911268-2	PAN HEAD SCREW M5X45
56	863999-8	5008MG NAME PLATE
57	419550-8	FRONT GRIP
58	643650-4	BRUSH HOLDER CAP 6.5-13.5
59	181044-0	CARBON BRUSH CB-153
60	257953-6	BOW STOP RING E-12
61	272253-3	LEVER 56
62	252199-9	HEX. NUT M8-13
63	941201-0	FLAT WASHER 8
64	345835-5	ANGULAR GUIDE
65	256511-5	SHOULDER PIN 6-7
66	257759-2	SLEEVE 6
67	941101-4	FLAT WASHER 5
68	922261-1	HEX. SOCKET HEAD BOLT M5X40
69	266396-1	FLAT HEADSQUARE NECKBOLT M8X24
70	331719-3	PIPE 9
71	345833-9	DEPTH GUIDE
72	256511-5	SHOULDER PIN 6-7
73	266237-1	CAP SQUARE NECK BOLT M8X90
74	266229-0	H.S.SET SCREW(CUP POINT)M5X8
75	158423-7	BASE COMPLETE
76	266229-0	H.S.SET SCREW(CUP POINT)M5X8
77	251370-2	+ PAN HEAD SCREW M5
78	419549-3	DIAL 27
79	216008-6	STEEL BALL 4
80	233314-4	COMPRESSION SPRING 4
81	266229-0	H.S.SET SCREW(CUP POINT)M5X8
82	251858-2	SCREW M6X15
83	253811-4	FLAT WASHER 5
85	450351-5	SPACER